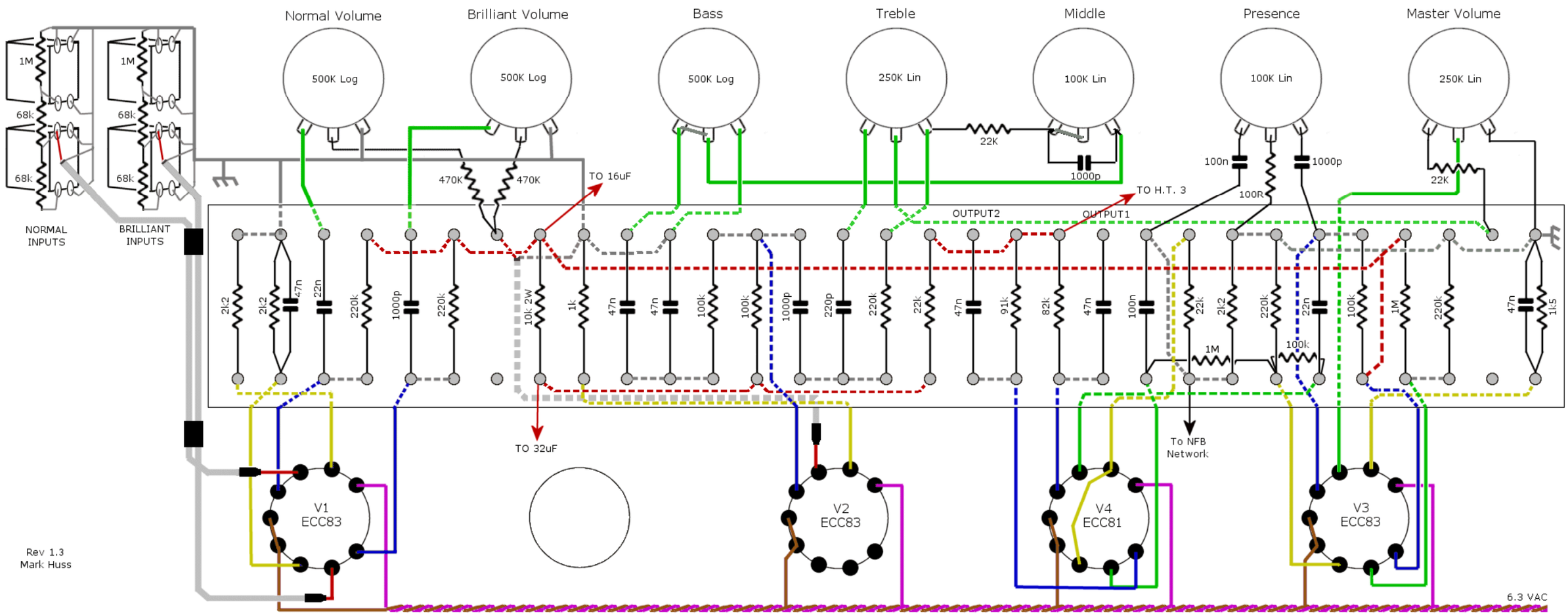
Normal Volume
Brilliant Volume
Bass
Treble
Middle
Presence
Master Volume
500K Log
500K Log
500K Log
250K Lin
100K Lin
100K Lin
250K Lin
1M
68k
68k
1M
68k
68k
NORMAL INPUTS
BRILLIANT INPUTS
470K
470K
TO 16uF
22K
1000p
100n
100R
1000p
22K
TO H.T. 3
OUTPUT2
OUTPUT1
2k2
2k2
47n
22n
220k
1000p
220k
10k 2W
1k
47n
47n
100k
100k
1000p
220p
220k
22k
47n
91k
82k
47n
100n
22k
2k2
220k
22n
100k
1M
220k
47n
1k5
1M
100k
TO 32uF
To NFB Network
V1 ECC83
V2 ECC83
V4 ECC81
V3 ECC83
6.3 VAC
Rev 1.3
Mark Huss