HIWATT

Early 70s Linked-Input Preamp
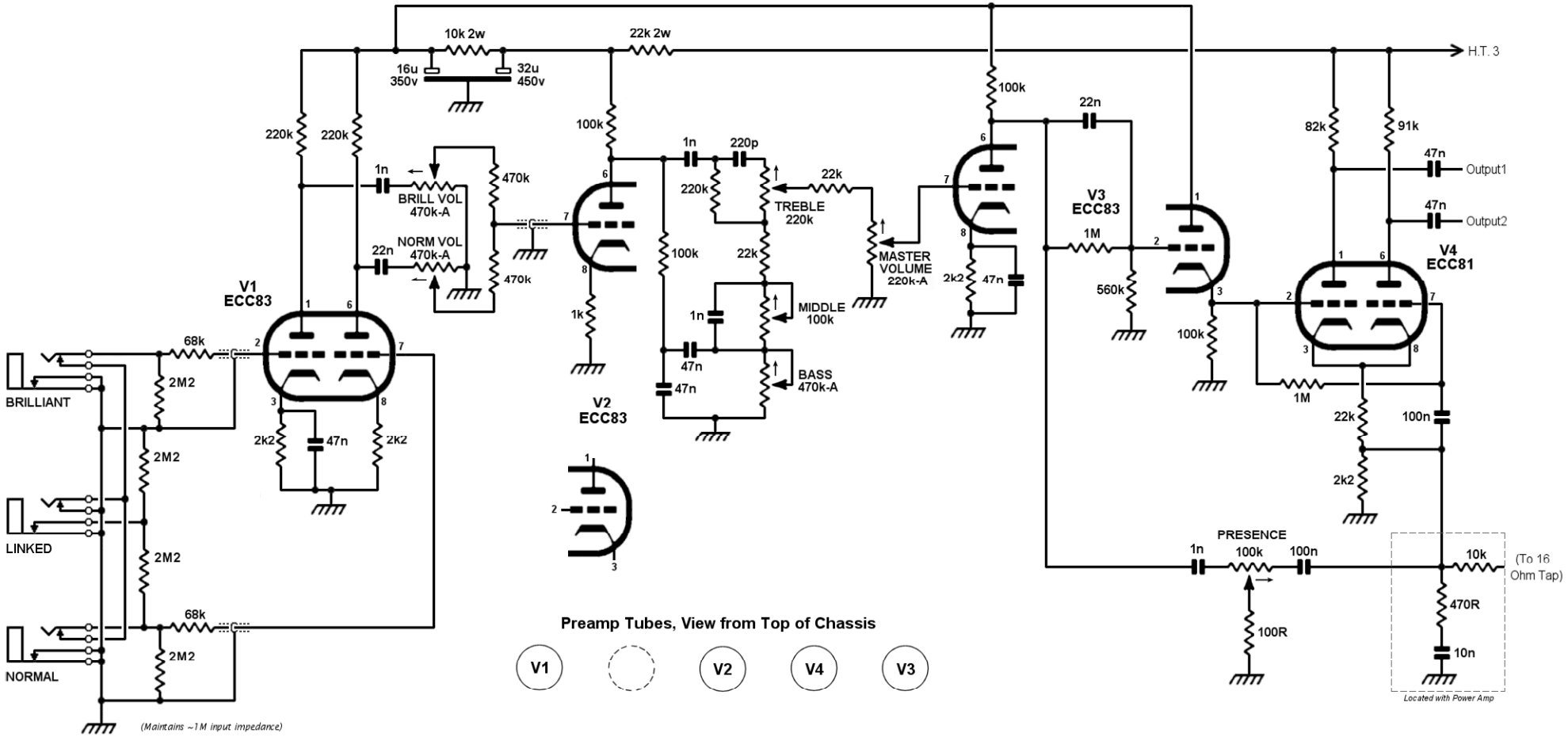
Drawing rev. 2.0 - Mark Huss
(G.M.Flore Variation)